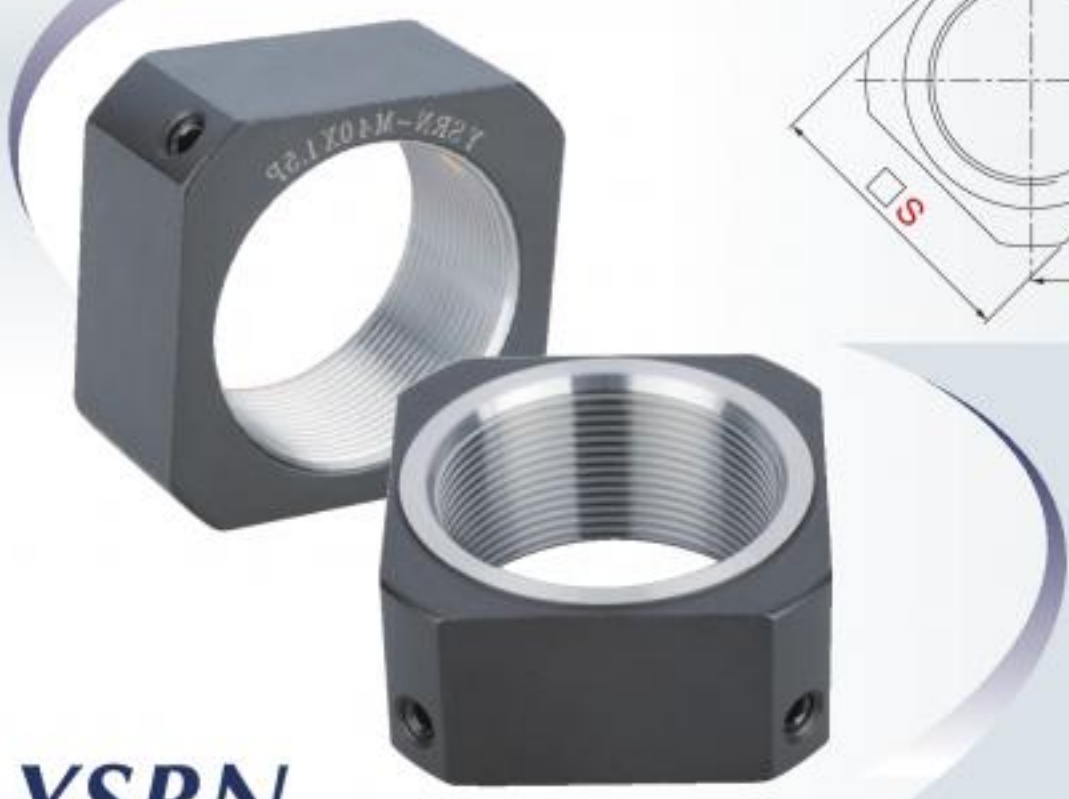

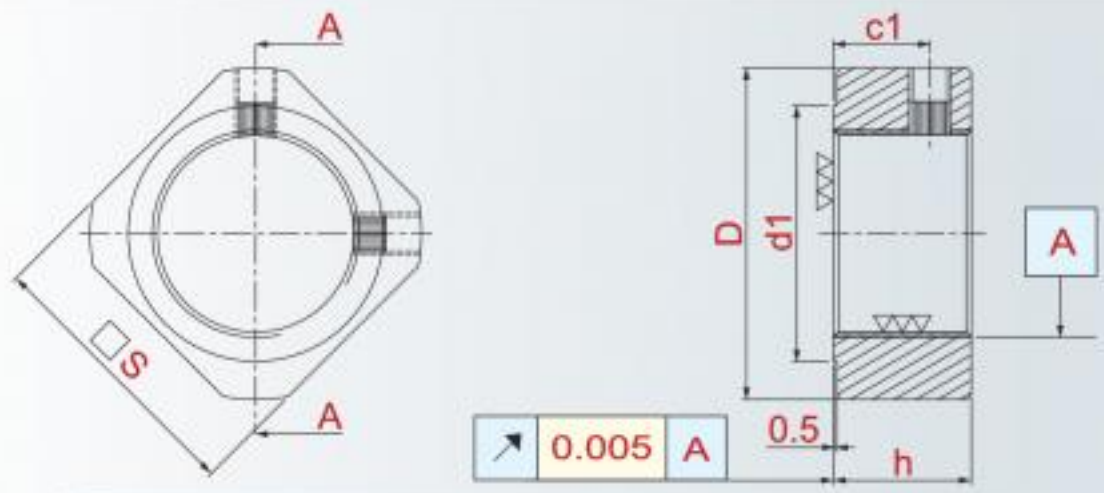

YSRN

Square outer shape **YSRN** locknut , two point locking brass screws in 90° position. Suitable for bearing supporting seat. Inner threads and end surface are simultaneously machined, assuring the assembly accuracy.

- Material Composition: S45C(C45E4)
- Hardness: HRC26°~28°
- Thread Accuracy: ISO 4H
- Manufacturing Method: High Precision Turning
- Run Out: 0.005mm

Thread	D	h	d1	n-m	c1	S	MAX. Nm
YSRN-M5 x 0.5P	12.5	5	8	2-M3	2.7	11	0.9
YSRN-M6 x 0.75P	13.5	5	9	2-M3	2.7	12	0.9
YSRN-M8 x 1.0P	16	6.5	11	2-M3	4	14	0.9
YSRN-M10 x 1.0P	19	8	13	2-M3	5.5	16	0.9
YSRN-M12 x 1.0P	22	8	16	2-M4	5.5	19	3.5
YSRN-M15 x 1.0P	25	8	19	2-M4	4.75	22	3.5
YSRN-M17 x 1.0P	29	13	21	2-M4	9	24	3.5
YSRN-M20 x 1.0P	35	11	27	2-M4	7	30	8
YSRN-M25 x 1.5P	43	15	32	2-M6	10	35	8
YSRN-M30 x 1.5P	48	20	37	2-M6	14	40	8
YSRN-M35 x 1.5P	60	21	47	2-M6	14	50	8
YSRN-M40 x 1.5P	62	25	47	2-M6	18	50	8

Notes: (1) Above information is for reference only. Yinsh may change specs without prior notice. (2) 1Nm=10.2kgf.cm=0.73lb.ft